<Vehicles with petrol engine except 4G1>

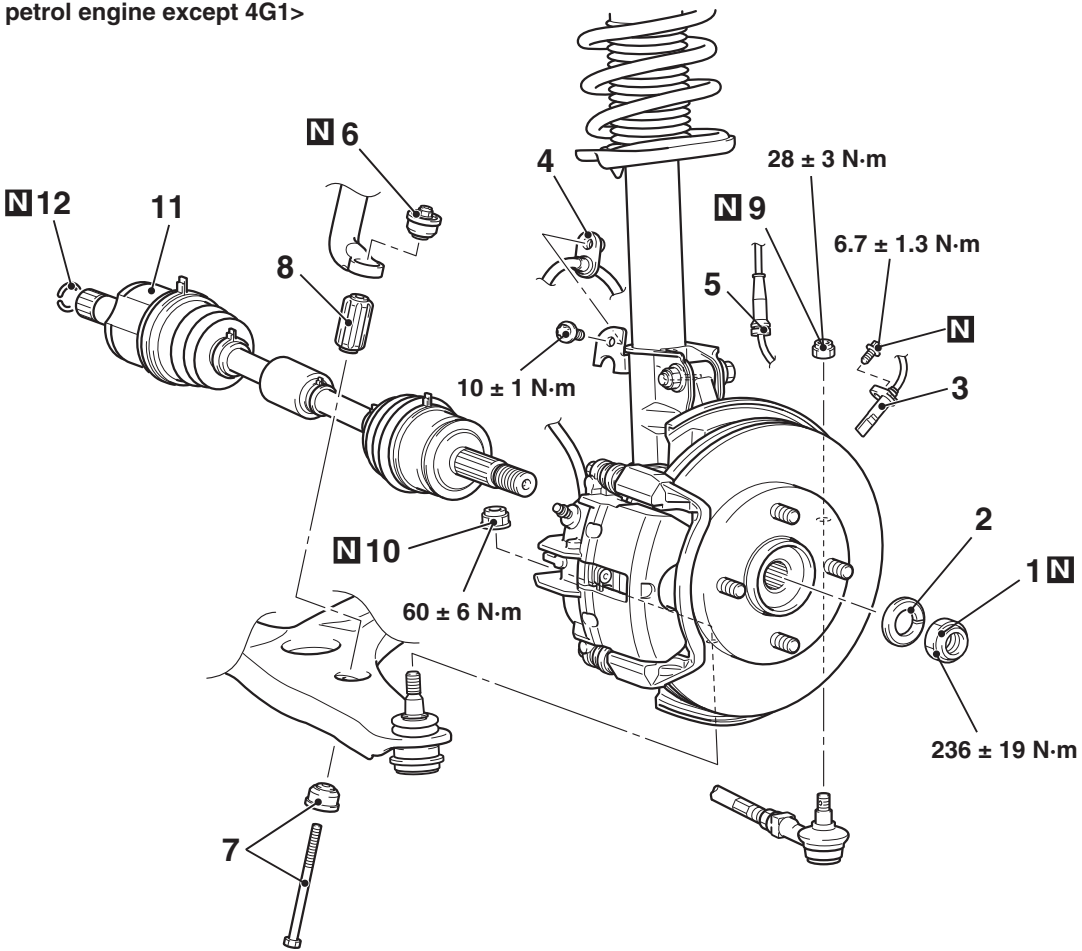

AC404419AB